MEHRAN UNIVERSITY OF ENGINEERING AND TECHNOLOGY, JAMSHORO

FIRST TERM THIRD YEAR (5H TERM) B.E (ELECTRONICS) REGULAR EXAMINATIONTION 2006 OF 04 BATCHES UNDER EXTERNAL SYSTEM.

Control Engineering-I

Dated: Time Allowed: 03 Hours Max: Marks-80

NOTE: *Attempt any **five** questions. All questions carry equal marks.*

Q. No.01 **(a)** Impulse response of a first order system is given below **[08]**

$$c(t)=4/3\ \exp(-t/3)$$

Obtain

i) Transfer Function
ii) Time constant and gain of the system
iii) Step response
iv) Ramp response

(b) Locate the region of the poles in left half S-plane for each of the following case. Where ζ is damping ratio. **[08]**

i) $\zeta=0$
ii) $0<\zeta<1$
iii) $\zeta=1$
iv) $\zeta>1$

Also draw the corresponding step response.

Q. No.02 **(a)** Consider the liquid level systems shown in the following figure. Drive the mathematical model for the system assuming the liquid flow to be laminar. **[08]**

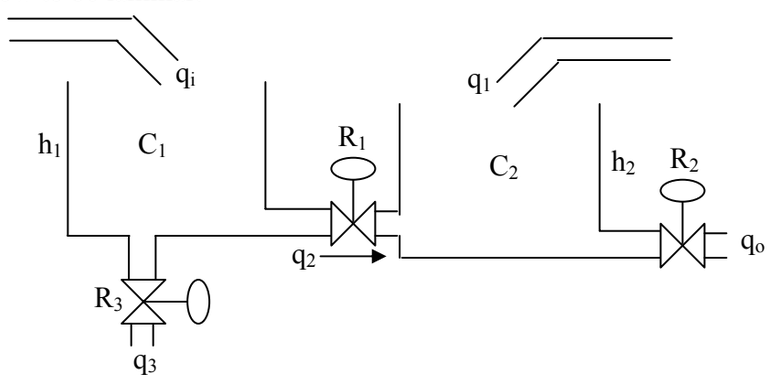

(b) Magnitude response of a system is shown in the following figure. Obtain the transfer function and also determine that how much gain should be added to the system to achieve infinite phase margin. **[08]**

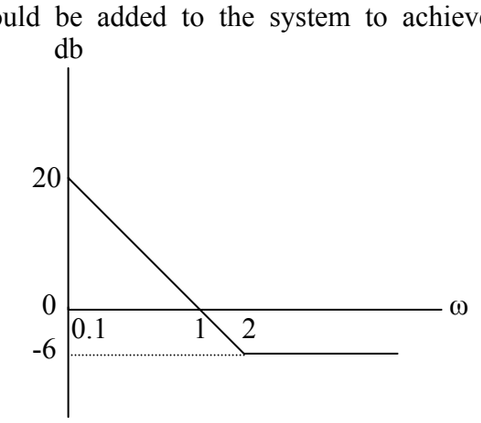

Q. No.03 A unity feedback system is used to track the sun to obtain maximum power from a photovoltaic array. The tracking system has the open loop transfer function given below. **[08]**

$$G(S) = \frac{100}{TS+3}$$

Where T=4 seconds. Calculate the sensitivity of the closed loop system for a small change in T.

(b) Consider a robot thsat is programmed to follow a prescribd path shown in the following figure. **[08]**

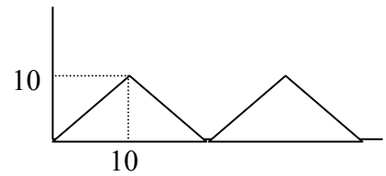

The transfer function of the plant is

$$G(S) = \frac{100(S+1)}{S(S+5)(S+7)}$$

For the unity feedback system calculate the steady state error.

Q. No.04 Obtain the state equations and the output equation from the following state diagram and drive the transfer function of the system. **[16]**

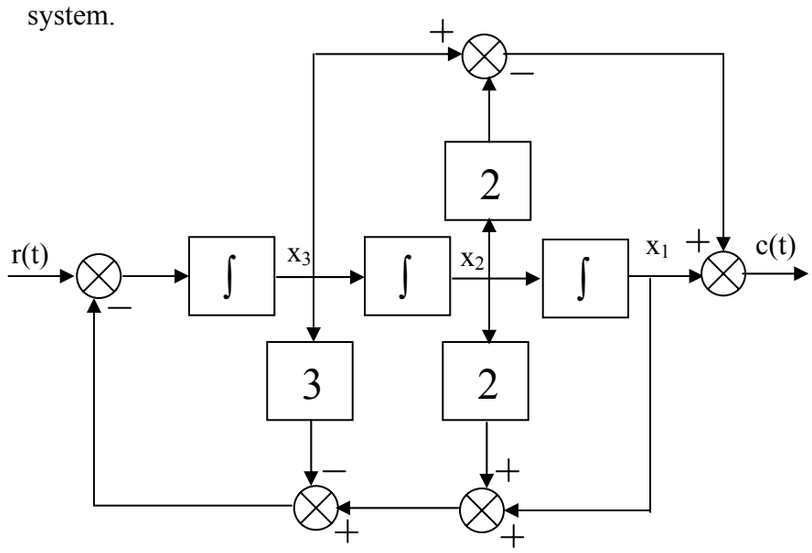

Q.No.05 **(b)** A laser jet printer uses a laser beam to print copy rapidly for a computer. The laser is positioned by a control input r(t), so that we have **[16]**

$$C(S) = \frac{5(S+100)}{S^2 + 6S + 5} R(S)$$

The input r(t) represents the desired position of the laser beam.

(a) If r(t) is the unit step input, find the output y(t).
(b) What is the final value of y(t).

Q.No.06 **(a)** Use the Routh Herwitz criterion to find how many poles of the following closed system T(S) are in L.H.P, in R.H.P and on jω axis. **[06]**

$$T(S) = \frac{S^3+7S^2-21S+10}{S^6+S^5-6S^4-S^2-S+6}$$

(b) Determine the value of K_1 and K_2 of the closed loop system shown in the figure so that maximum overshoot in unit step response is 25% and peak time is 2 sec. Assume that J = 2 kg-m^2. **[10]**

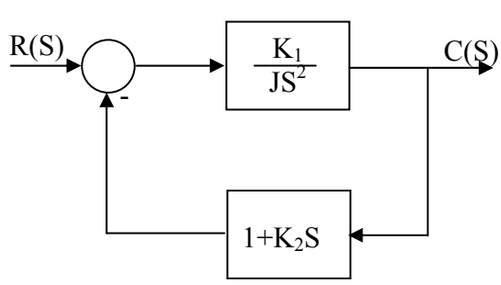

Q.No.07 A system is shown in the figure-1. The response to the unit step input, when K=1 is shown in the figure-2. Determine the value of K so that steady state error is equal to zero. **[16]**

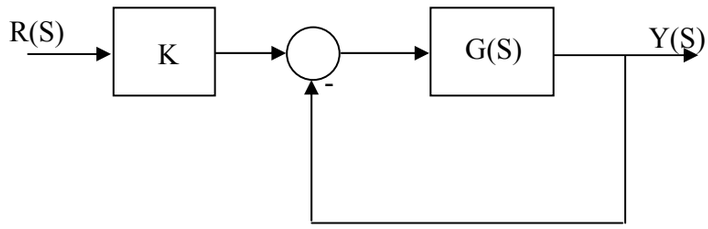

Fig-1

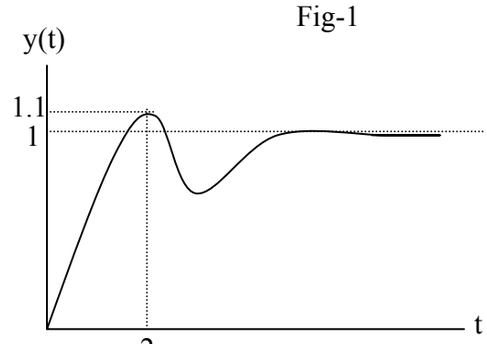

Fig-2

Q.No.08 The open loop transfer function of a unity feedback system is given by **[16]**

$$G(S) = \frac{K}{S(S+2)(S+4)}$$

Determine the value of K so that M (resonant peak) is 2.